Machine Translated by Google

SM16206

Overview

The SM16206 is an LED constant current driver chip with a built-in CMOS shift register. The register and latch functions can convert serial input data into parallel output. Output data format.

The SM16206 operates at a voltage of 3.3V–5.0V and provides 16 current sources. It can provide a constant current of 1mA–32mA at each output port; and single The output current difference within a single IC is less than ±2.5%; the output current difference between multiple ICs is... The current difference is less than ±3.5%; the channel output current does not change with the output terminal voltage. The current changes with (VDS); and the current is affected by voltage and ambient temperature. The variation is less than 1%; the output current of each channel is determined by an external resistor. Adjustment.

The SM16206 output ports can withstand voltages up to +15V, therefore it can be used in each Multiple LEDs can be connected in series at the output; additionally, the SM16206 can reach up to 25MHz. The clock frequency can meet the system's requirements for large amounts of data transmission.

Features

ÿ 16-channel constant current source output

ÿ Constant current:

1—32mA@VDD=5.0V

@Intra-film error <±2.5%, inter-film error <±3.5%

1—22mA@VDD=3.3V

@Intra-film error <±2.5%, inter-film error <±3.5%

ÿ Output current is adjustable with an external Rext resistor.

ÿ Fast output current response, OE (minimum): 35ns

ÿ Clock frequency up to 25MHz

Operating voltage: 3.3V~5.0V

Package types: SSOP24, QSOP24, QFN24 (4*4)

Application areas

LED display screen

ÿ LED lighting

Encapsulation information

Product Name	Packaging Form	Molded body dimensions ÿmmÿ	Foot spacing ÿmmÿ
SM16206D	SSOP24	13.0*6.0*1.8	1.0
SM16206S	QSOP24	8.65*3.9*1.4	0.635
SM16206N-2	QFN24(4*4)	4*4*0.85	0.5

Pin Definitions

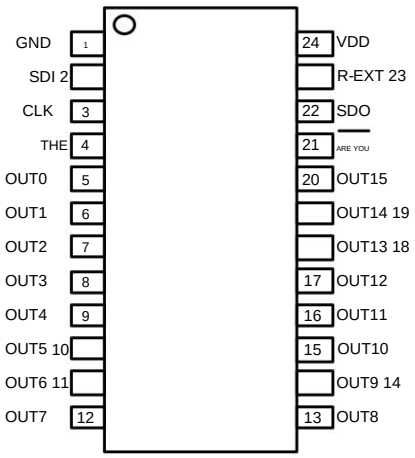

(SSOP24/QSOP24)

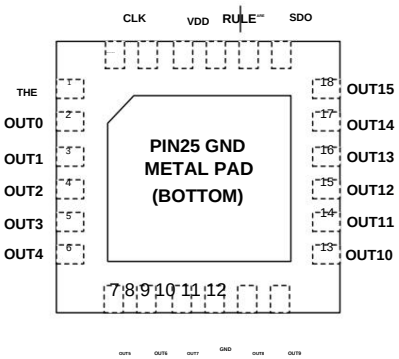

QFN24(4*4)

Machine Translated by Google

Internal functional block diagram

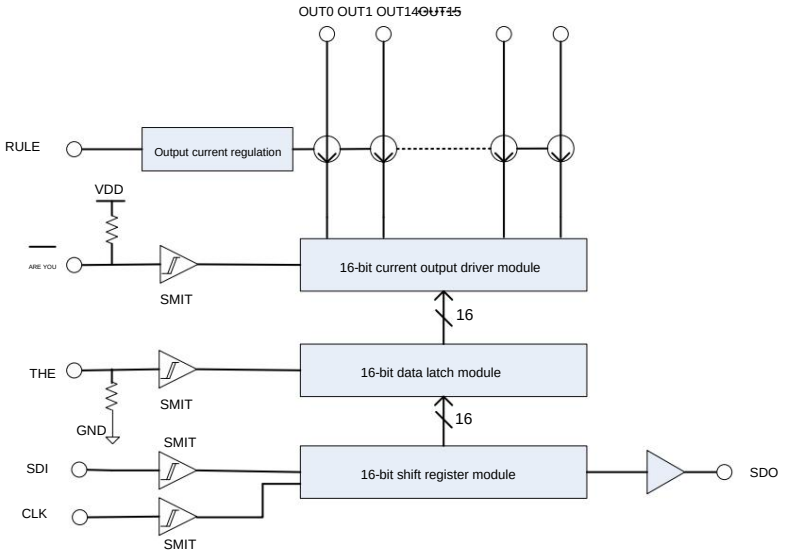

Fig. Internal functional block diagram of SM16206

Pin Description

name	Function Description
GND	Chip ground
SDI	Serial data input port
CLK	The clock signal input port shifts data on the rising edge of the clock.
THE	The data latch control port: when LE is high, serial data is passed to the output latch; when LE is low, serial data is passed to the output latch. The data will be locked.
OUT0ÿOUT15	Constant current drive port
ARE YOU	The output enable control port will activate OUT0 to OUT15 when OE is low; and will not activate OUT0 to OUT15 when OE is high. OUT15 output will be turned off.
SDO	Serial data output port; can be connected to the SDI port of the next chip.
R-EXT	The input port connects to an external resistor; this external resistor allows setting the output current for all output channels.
VDD	Chip power supply

Ordering Information

Order Model	Packaging	Packaging		Reel size
		Tube	braided ribbon	
SM16206D	SSOP24	36,000 pieces/box	2000 pieces/plate	13-inch
SM16206S	QSOP24	100,000 pieces/box	4000 pieces/plate	13-inch
SM16206N-2	QFN24(4*4)	/	5000 pieces/plate	13-inch

Machine Translated by Google

Output and input equivalent circuits

ÿ $\overline{\text{OE}}$ input terminal

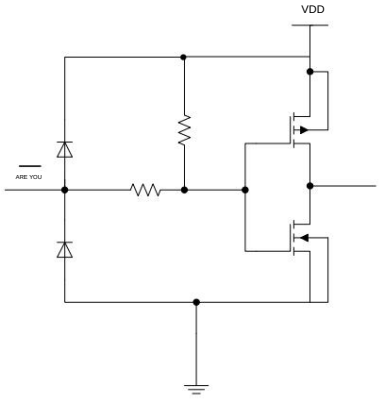

LE input terminal

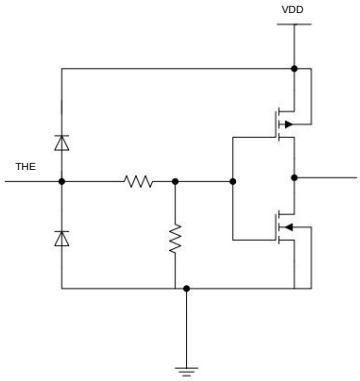

ÿ CLK, SDI input terminals

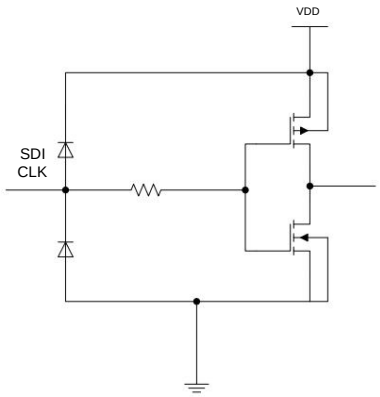

SDO output terminal

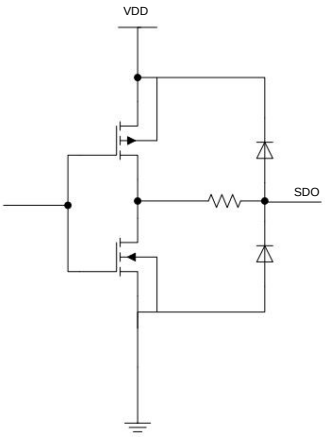

ÿ OUT0~OUT15 Output terminals

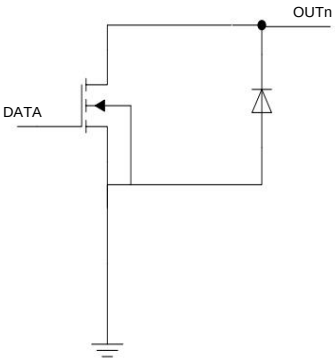

Machine Translated by Google

Time series diagram

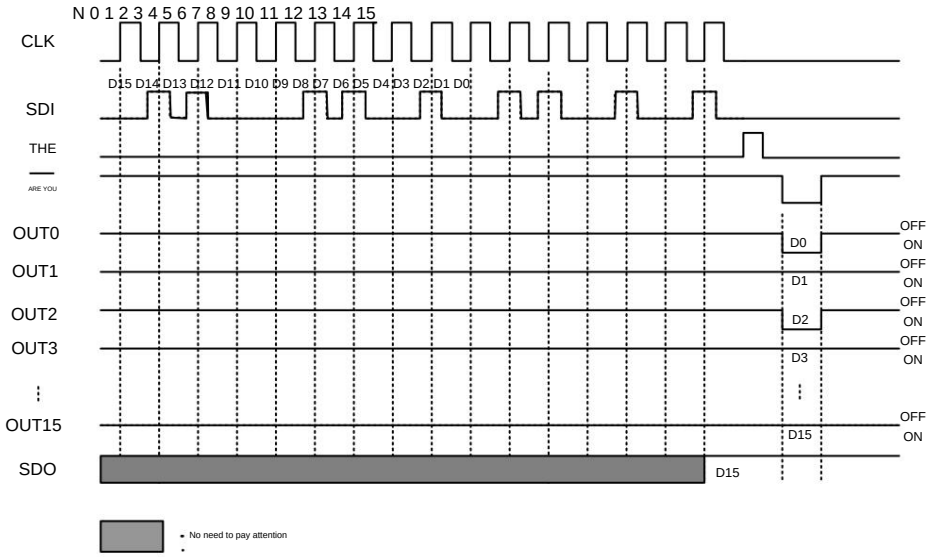

Truth table

CLK	THE	ARE YOU	SDI	OUT0…OUT7…OUT15	SDO
↑	H	L	Dn	Dn...Dn-7...Dn-15	Dn-15
↑	L	L	Dn+1	No Change	Dn-14
↑	H	L	Dn+2	Dn+2...Dn-5...Dn-13	Dn-13
↓	×	L	Dn+3	Dn+2...Dn-5...Dn-13	Dn-13
↓	×	H	Dn+3	off	Dn-13

Maximum limiting parameter

characteristic	Representative symbol	Maximum Limitation Range	unit
power supply voltage	VDD	0ÿ7.0	In
Input voltage	VSDA,VCLK,VLE,VOE	-0.4ÿVDD+0.4	In
OUT port current	IOUT	45	m.a.
OUT port withstand voltage	VDS	-0.5ÿ+16.0	In
clock frequency	fCLK	30	MHz
Ambient temperature during IC operation	Topr	-40ÿ+85	ÿ
Ambient temperature during IC storage	Test	-55ÿ+150	ÿ
HBM Human Body Discharge Mode	VESD	>4	KV

Note: The maximum peak temperature for surface mount products should not exceed 260ÿ. The temperature profile should be set by the factory based on the J-STD-020 standard, with reference to the factory's actual conditions and the solder paste supplier's recommendations.

Machine Translated by Google

DC characteristics

(VDD= 5.0V, Ta = 25ÿ)

characteristic	Representative symbol	Measurement conditions		Minimum value, typical value, maximum value, unit			
Static current	I DD(off)1	`rext` is left floating, OUT0~OUT15 = OFF		-	1.5	-	m.a.
	I DD(off)2	resistance = 1800ÿÿOUT0~OUT15 = OFF		-	2.6	-	m.a.
	I DD(off)3	resistance = 920ÿÿOUT0~OUT15 = OFF		-	3.8	-	m.a.
SDO drive current	IOH	VDD = 5.0V		-	-21	-	m.a.
	' OL			-	21	-	m.a.
SDO output voltage	VOL	IOL = +1mA		-	-	0.4	In
	VOH	IOH = -1mA		4.6	-	-	In
Input port toggles level	HIV	VDD=5.0V		0.7*VDD	-	VDD	In
	WILL			GND	-	0.3*VDD	In
OUT output leakage current	HAIR	VDS =15VÿOUT0~OUT15 = OFF		-	-	0.5	a
OUT port output current	IOUT	VDD = 5.0V		1	-	32	m.a.
OUT port output current 1	IOUT1	VDS =1.0V	rext = 1800ÿ	-	9.2	-	m.a.
Output current error	DIOUT	VDS = 1.0V rext = 1800ÿ	In the film	-	± 2.5%	-	
			Between films	-	± 3.5%	-	
OUT port output current 2	IOUT2	VDS = 1.0V	rext = 920ÿ	-	17.9	-	m.a.
Output current error	DIOUT	VDS = 1.0V rext = 920ÿ	In the film	-	± 2.5%	-	
			Between films	-	± 3.5%	-	
Output current error / VDS change % / ÿVDS		VDS =1.0Vÿ3.0VÿIOUT =17.9mA		-	1	-	%/V
Output current error / VDD change % / ÿVDD		VDD =4.5Vÿ5.5VÿIOUT =17.9mA		-	1	-	%/V
Pull-up resistor	R OE(up)	ARE YOU		-	250	-	Kÿ
Pull-down resistor	RLE(down)	THE		-	250	-	Kÿ

Machine Translated by Google

(VDD=3.3V, Ta=25ÿ)

characteristic	Representative symbol	Measurement conditions		Minimum value, typical value, maximum value, unit			
Static current	I DD(off)1	`rext` is left floating, OUT0~OUT15 = OFF		-	1.2	-	m.a.
	I DD(off)2	resistance = 1800ÿÿOUT0~OUT15 = OFF		-	3.6	-	m.a.
	I DD(off)3	resistance = 920ÿÿOUT0~OUT15 = OFF		-	2.5	-	m.a.
SDO output voltage	VOL	IOL = +1mA		-	-	0.3	In
	VOH	IOH = -1mA		3.0	-	-	In
SDO drive current	IOH	VDD = 3.3V		-	-10.5	-	m.a.
	' OL			-	13.3	-	m.a.
Input port toggles level	HIV	VDD=3.3V		0.7*VDD	-	VDD	In
	WILL			GND	-	0.3*VDD	In
OUT output leakage current	HAIR	VDS =15VÿOUT0~OUT15 = OFF		-	-	0.5	a
OUT port output current	IOUT	VDD =3.3V		1	-	22	m.a.
OUT port output current 1	IOUT1	VDS =1.0V	rext = 1800ÿ	-	9.2	-	m.a.
Output current error	DIOUT	VDS = 1.0V rext = 1800ÿ	In the film	-	± 2.5%	-	
			Between films	-	± 3.5%	-	
OUT port output current 2	IOUT2	VDS = 1.0V	rext = 920ÿ	-	17.9	-	m.a.
Output current error	DIOUT	VDS = 1.0V rext = 920ÿ	In the film	-	± 2.5%	-	
			Between films	-	± 3.5%	-	
Output current error / VDS change % / ÿVDS		VDS =1.0Vÿ3.0VÿIOUT = 17.9mA		-	1	-	%/V
Output current error / VDD change % / ÿVDD		VDD =3.3Vÿ3.8VÿIOUT = 17.9mA		-	1	-	%/V
Pull-up resistor	R OE(up)	ARE YOU		-	250	-	Kÿ
Pull-down resistor	RLE(down)	THE		-	250	-	Kÿ

Machine Translated by Google

DC characteristic test circuit

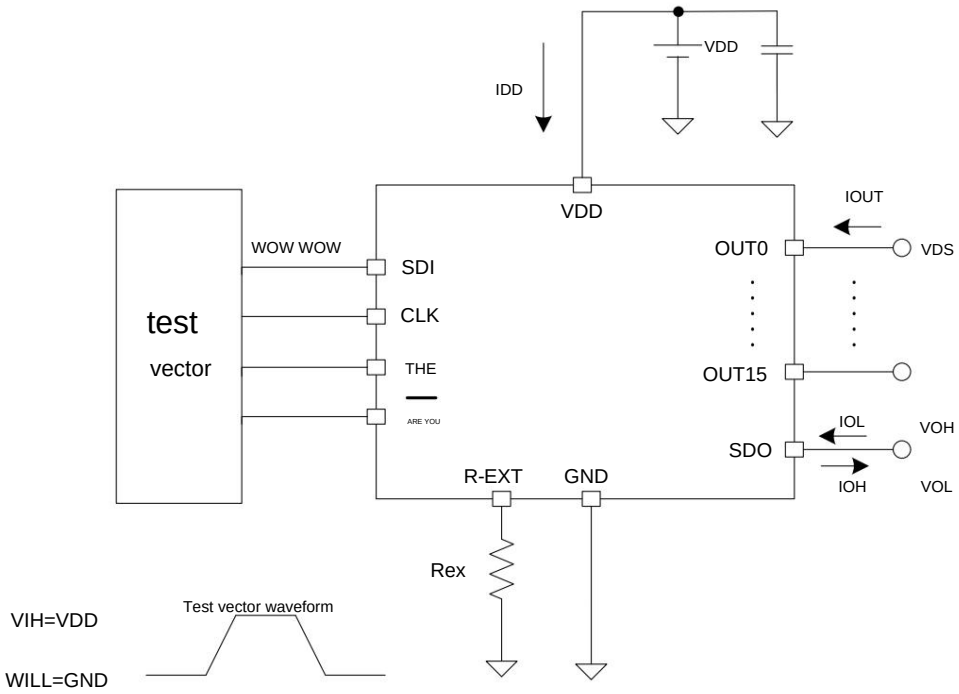

Machine Translated by Google

Dynamic characteristics

ÿVDD= 5.0V, Ta = 25ÿÿ

characteristic		Representation, measurement conditions, minimum value, general value, maximum value, unit					
Delay time (Low level to high level)	CLK——OUT	tpLH1	VIH=VDD WILL=GND Rext=1800ÿ VDD=5.0V RL=400ÿ CL=10pF	-	30	-	ns
	THE OUT	tpLH2		-	26	-	ns
	YOU——OUT	tpLH3		-	30	-	ns
	CLK——SDO	tpLH		-	28	-	ns
Delay time (High level to low level)	CLK——OUT	tpHL1		-	35	-	ns
	THE OUT	tpHL2		-	33	-	ns
	YOU——OUT	tpHL3		-	35	-	ns
	CLK——SDO	tpHL		-	27	-	ns
Current output rise time		ALL-RISE		-	30	-	ns
Current output fall time		ALL-FALL		-	35	-	ns

ÿVDD=3.3V, Ta=25ÿÿ

characteristic		Representation, measurement conditions, minimum value, general value, maximum value, unit					
Delay time (Low level to high level)	CLK——OUT	tpLH1	VIH=VDD WILL=GND Rext=1800ÿ VDD=3.3V RL=200ÿ CL=10pF	-	42	-	ns
	THE OUT	tpLH2		-	36	-	ns
	YOU——OUT	tpLH3		-	45	-	ns
	CLK——SDO	tpLH		-	30	-	ns
Delay time (High level to low level)	CLK——OUT	tpHL1		-	38	-	ns
	THE OUT	tpHL2		-	33	-	ns
	YOU——OUT	tpHL3		-	40	-	ns
	CLK——SDO	tpHL		-	29	-	ns
Current output rise time		ALL-RISE		-	26	-	ns
Current output fall time		ALL-FALL		-	18	-	ns

Machine Translated by Google

Dynamic characteristic test circuit

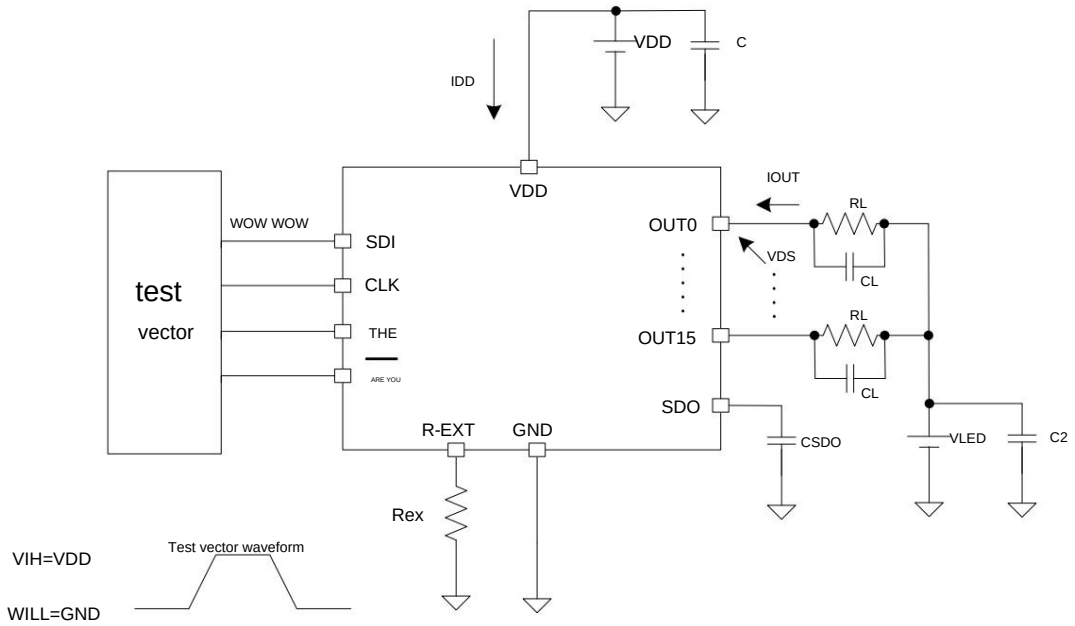

Timing waveform diagram

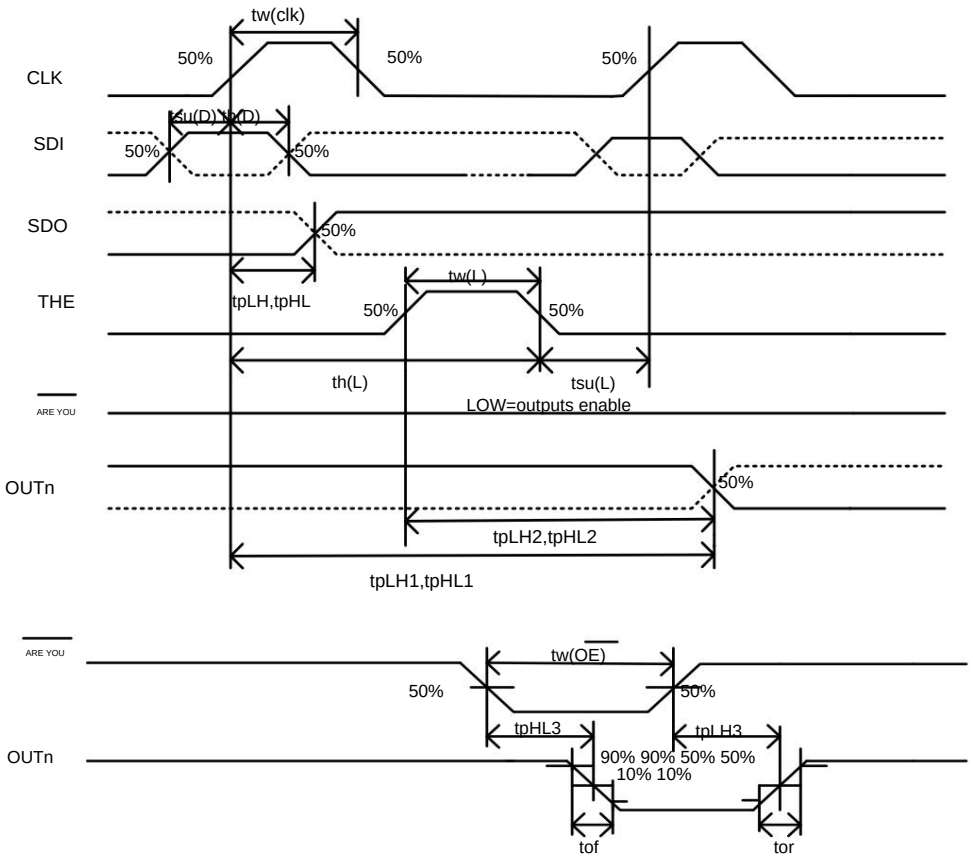

Machine Translated by Google

Product Application

The SM16206 exhibits minimal current differences between channels and between chips, stemming from its excellent constant current output characteristics.

The maximum current error between channels within the chip is less than ±2.5%, while the maximum current error between chips is less than ±3.5%.

The stability of its output current is unaffected when the load terminal voltage (VDS) changes, as shown in the figure below.

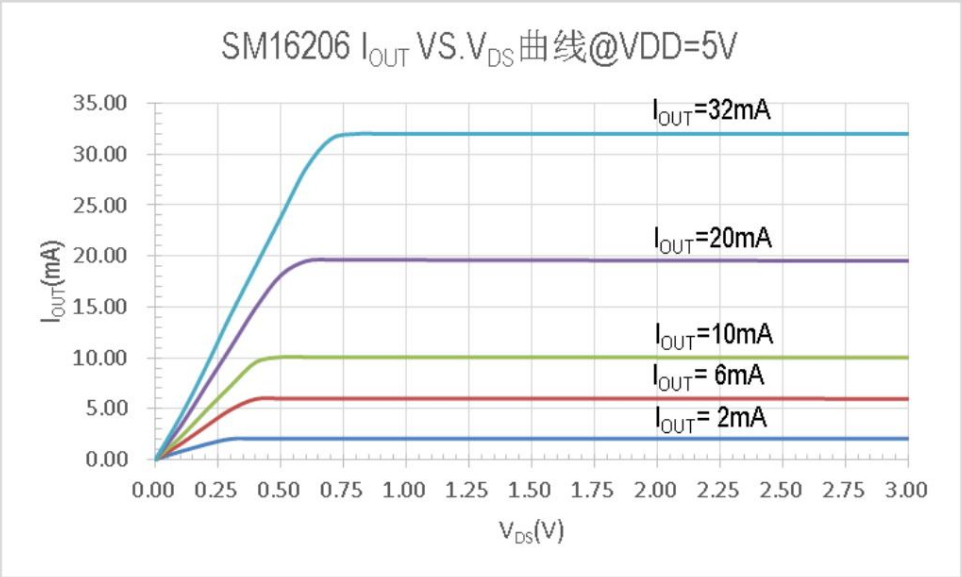

Fig. SM16206 IOUT constant current characteristic curve

Machine Translated by Google

Adjust output current

As shown in the figure below, the output current IOUT is adjusted by an external resistor (rext) . The output current value can be calculated using the following formula:

IOUT=16500/mA,

In the formula, `rext` refers to the resistance of the R-EXT port to ground, and the current unit is mA. For example, when `rext = 750ÿ`, the output can be calculated using the formula.

The current value is 22mA; when rext = 6000ÿ, the output current value is 2.8mA.

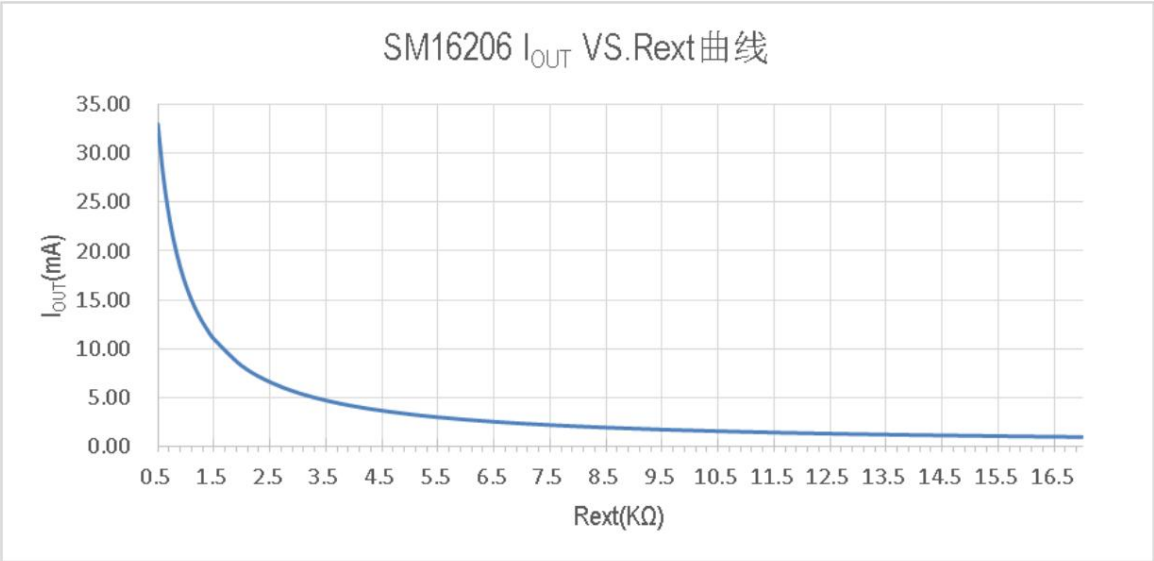

Fig. Relationship curve between IOUT and rex resistance of SM16206

Machine Translated by Google

Package thermal power (PD)

The maximum heat dissipation power of the package is given by the formula:

$$P_{D(max)} = \frac{(T_j - T_a)}{R_{th(ja)}}$$ To decide

When all 16 channels are fully open, the actual power consumption is:

PD(act)=IDD*VDD+IOUT*Duty*VDS*16

Actual power consumption must be less than maximum power consumption, i.e., PD(act) < PD(max). To maintain PD(act) < PD(max), the relationship between the maximum output current and the duty cycle is as follows:

$$I_{out} = \frac{\frac{T_j - T_a}{R_{th(ja)}} - IDD * VDD}{V_{DS} * Duty * 16}$$

Where Tj is the IC's operating temperature, Ta is the ambient temperature, VDS is the constant current output port voltage, Duty is the duty cycle, and Rth(ja) is the package's thermal resistance. The following figure shows...

Relationship between maximum output current and duty cycle:

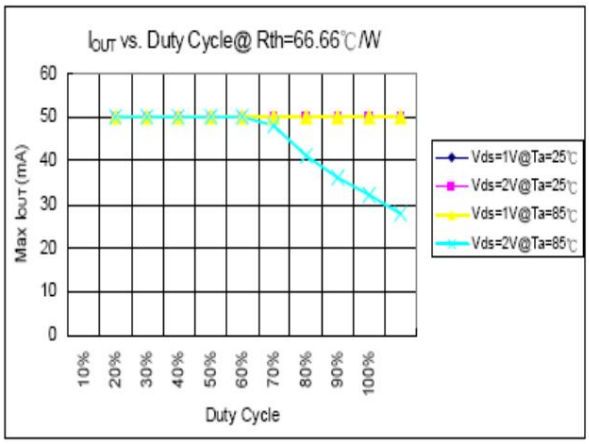

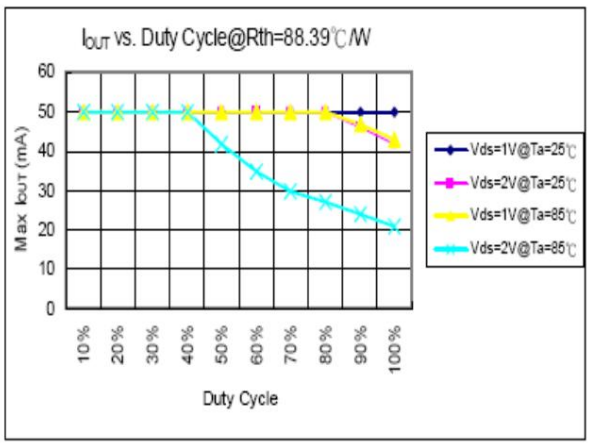

If a larger output current IOUT is required, a heatsink needs to be added. The calculation formula is as follows:

$$\frac{1}{R_{th(ja)}} = \frac{1}{R_{fc}} + \frac{P_{D(act)}}{T_j - T_a}$$ have to:

$$R_{fc} = \frac{R_{th(ja)} * (T_j - T_a) - T_j + T_a}{P_{D(act)} * R_{th(ja)} + T_j - T_a}$$

Where PD(act) = IDD * VDD + IOUT * Duty * VDS * 16

Therefore, if a larger current IOUT is to be output, the above formula can be used to calculate that a heatsink with a resistance of Rfc must be provided for the IC .

Machine Translated by Google

Load terminal voltage (VLED)

To optimize the heat dissipation of the package, it is recommended that the optimal operating range of the output voltage (VDS) be around 1.0V (based on IOUT = 1mAÿ32mA).

If VDS = VLED - VF and VLED = 5.0V, the excessively high output voltage (VDS) may cause PD(act) > PD(max). In this situation, it is recommended to minimize the output voltage (VDS).

A lower VLED voltage can be supplied, or an external series resistor or Zener diode can be used as VDrop. This will result in VDS = (VLED - VF) - VDROP, thereby reducing the output voltage (VDS).

The effect.

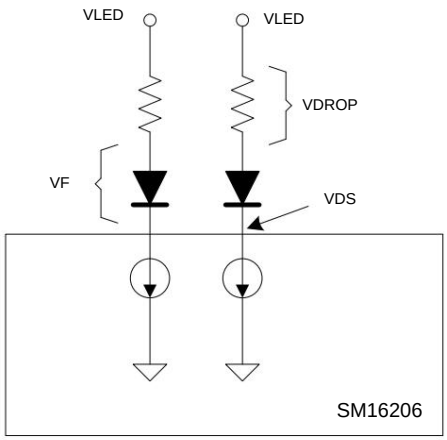

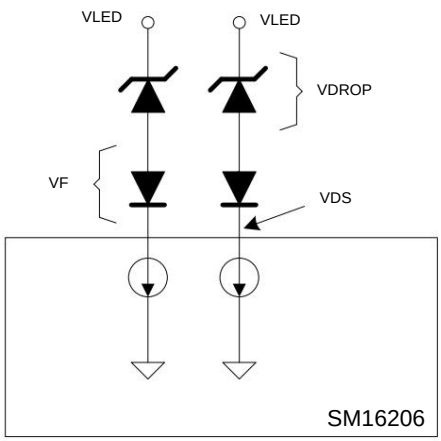

Machine Translated by Google

Packaging and soldering process

Mingwei Electronics' semiconductor products comply with European RoHS standards, and the soldering process temperature conforms to J-STD-020 standards.

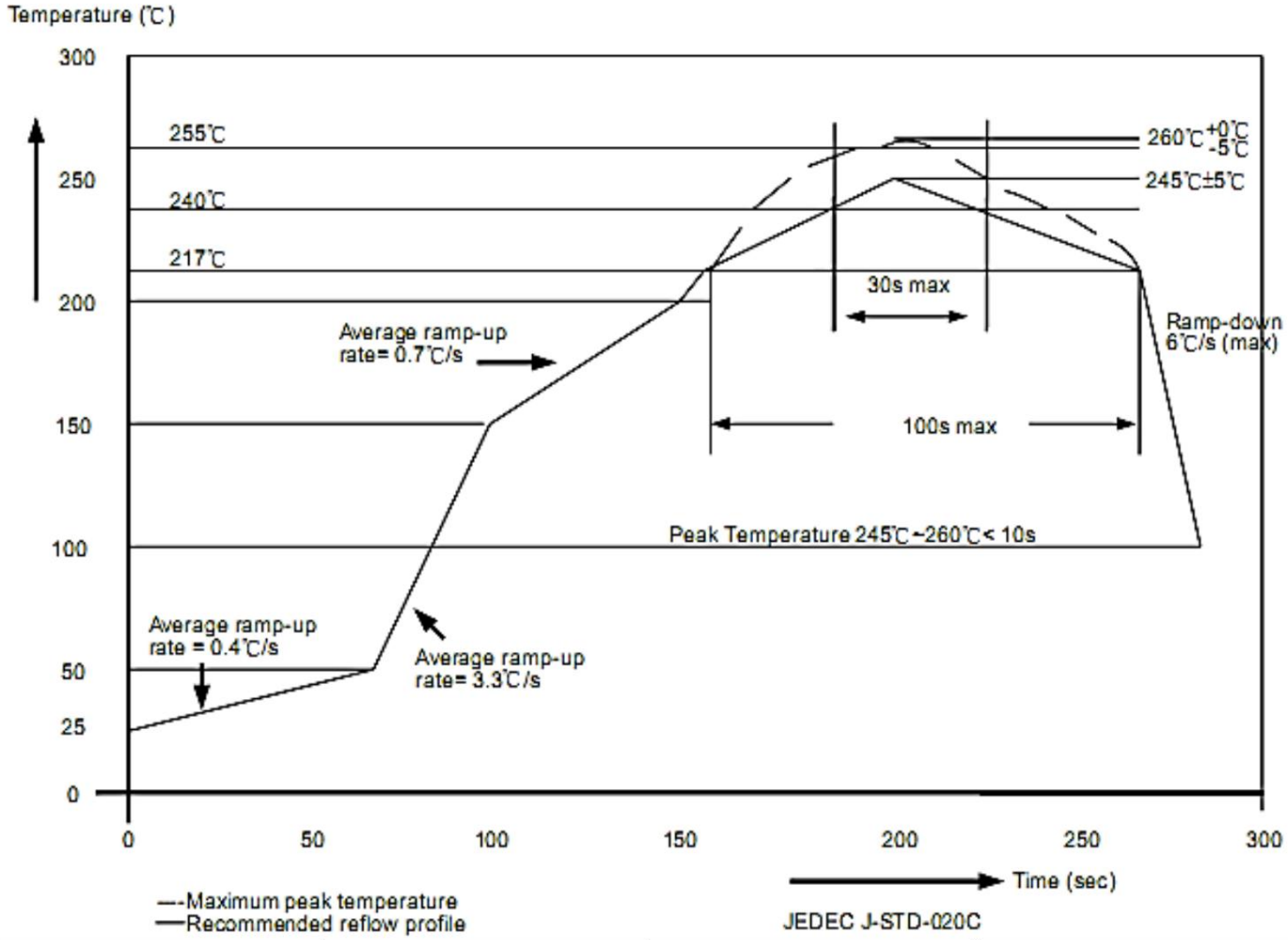

Package thickness	volume **mm3 < 350**	volume **mm3: 350~2000**	volume **mm3 ÿ 2000**
<1.6mm	260+0ÿ	260+0ÿ	260+0ÿ
1.6mm~2.5mm	260+0ÿ	250+0ÿ	245+0ÿ
ÿ2.5mm	250+0ÿ	245+0ÿ	245+0ÿ

Machine Translated by Google

Packaging

SSOP24

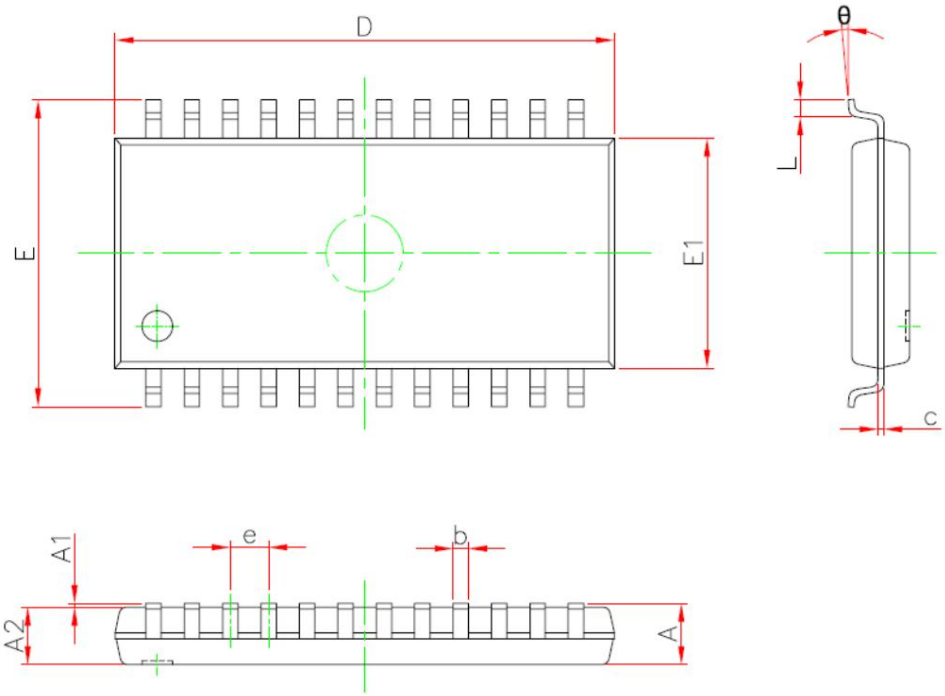

Symbol	Min(mm)	Max(mm)
A	·	2.15
A1	0.05	0.35
A2	1.2	1.9
b	0.15	0.75
c	0.05	0.45
D	12.6	13.5
AND	7.6	8.5
E1	5.6	6.5
and	1.0TYPE	
L	0.2	1.0
i	0°	10°

Machine Translated by Google

QSOP24

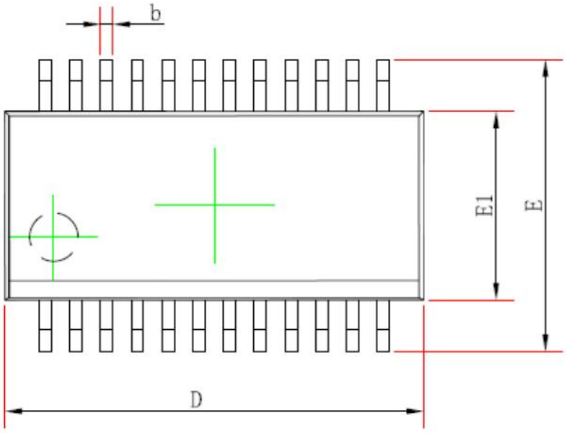

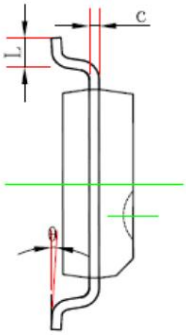

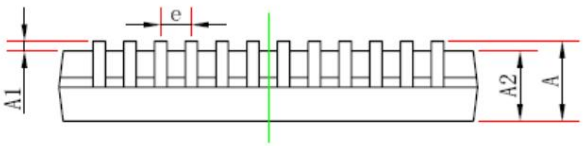

Symbol	Min(mm)	Max(mm)
A	·	1.95
A1	0.05	0.35
A2	1.05	·
b	0.1	0.4
c	0.05	0.254
D	8.2	9.2
E1	3.6	4.2
AND	5.6	6.5
and	0.635TYPE	
L	0.3	1.5
i	0°	10°

Machine Translated by Google

QFN24(4*4)

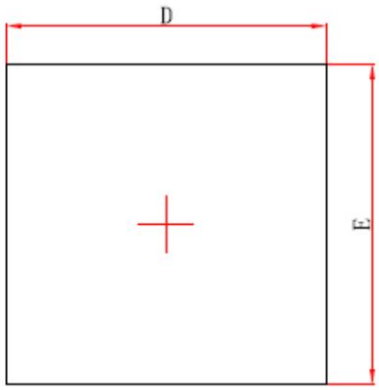

Top View

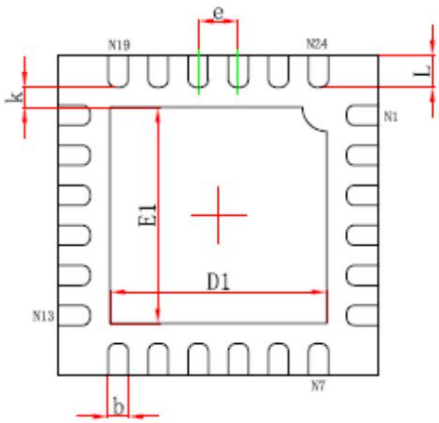

Bottom View

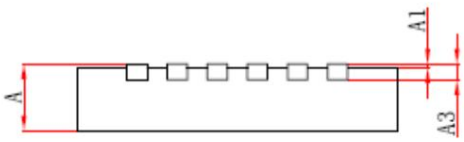

Side View

Symbol	Min(mm)	Max(mm)
A	0.6	1.0
A1	·	0.1
A3	0.203REF	
D	3.8	4.3
AND	3.8	4.3
D1	2.4	3.0
E1	2.4	3.0
K	0.2min	
and	0.5TYPE	
b	0.1	0.4
L	0.2	0.7

Machine Translated by Google

Usage Rights Statement

Mingwei Electronics reserves the right to make all changes, corrections, modifications, improvements, and terminations to its products, documentation, and services. Regarding the aforementioned rights, customers must... Before purchasing any product, it is recommended to contact a Mingwei Electronics sales representative to obtain the latest product information.

Mingwei Electronics products, unless legally authorized by Mingwei, should not be used for medical or military purposes. Any bodily injury resulting from such use is the sole responsibility of the user. Mingwei Electronics will not be liable for any damages, including harm, threats to life, or even death.

All text, images, and trademarks in this document are the intellectual property of Mingwei Electronics. Without Mingwei's legal authorization, no individual or organization may use, modify, reproduce, publish, alter, distribute, distribute, or publicly release any content that infringes upon the company's legitimate rights and interests. For any related infringement, the company will immediately initiate comprehensive legal proceedings to pursue legal liability.